MK-808 SHOWER FILTER

Best skin care

Your best choice:
Purebath Shower Filter
The Anisotropic Ferrite Magnet in the MK-808 creates a soft, more organized shower "feel" and improve both lathering & sudsing. It's unique multi-filtraton design provides the best shower experience for you and your family.

Replacement of Cartridge:

1. Open the top cover of the Shower Filter.(Part 1)
2. Replace the O-ring of the top cover, make sure O-ring well put in the groove.
3. Take out the used cartridge (part 4)
4. Put in the new cartridge, o-ring of the cartridge must be on top (Part 7).
5. Tightly lock the shower filter.

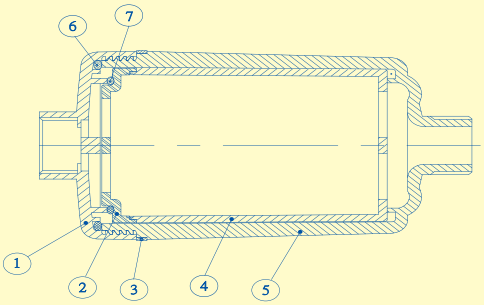

Main components:

* Anisotropic Ferrite Magnet
* High Flow Sediment Filtration
* Carbon Filtration
* Activated Ceramic Ball
* Calcium Sulfite
* KDF

Service Life: 12,000gal or 6 months

Max Temperature: 80°C/120°F

AQUAPRO

Member WATER QUALITY ASSOCIATION World Assembly Division

NSF MATERIAL

MEMBER WATER QUALITY ASSOCIATION